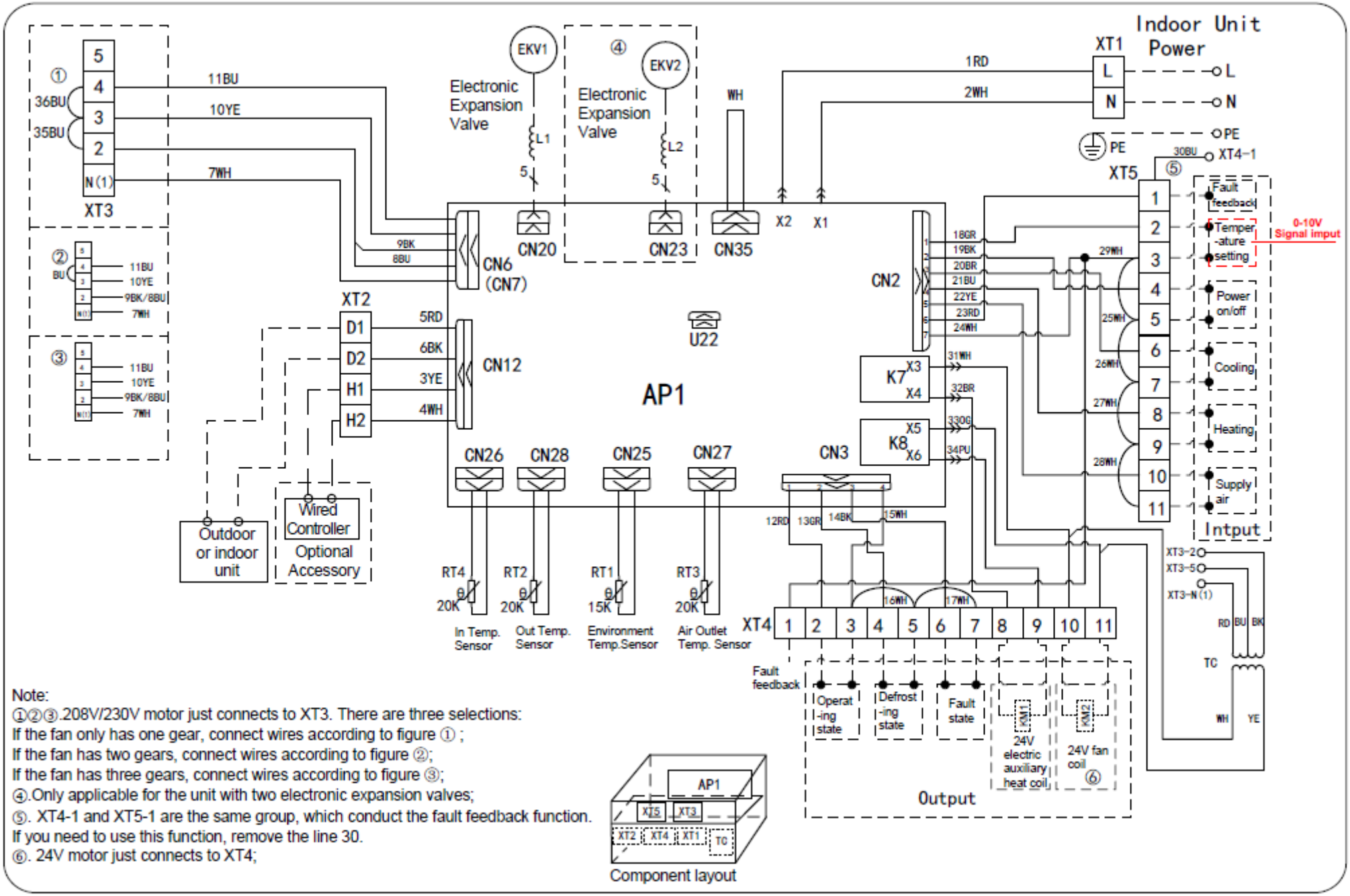

Note:
①②③.208V/230V motor just connects to XT3. There are three selections:
If the fan only has one gear, connect wires according to figure ① ;
If the fan has two gears, connect wires according to figure ②;
If the fan has three gears, connect wires according to figure ③;
④.Only applicable for the unit with two electronic expansion valves;
⑤. XT4-1 and XT5-1 are the same group, which conduct the fault feedback function.
If you need to use this function, remove the line 30.
⑥. 24V motor just connects to XT4;

Model:	ALPICAIR
AXV-560VRDC1B	
Wiring Diagram	2019-12-18